Wireless Charging Management Chip CH246

Datasheet

Version: 1D

http://wch.cn

1. Overview

The wireless charging management chip CH246, integrated wireless charging transceiver module and small signal decoding circuit can easily implement various WPC Qi wireless charging solutions in addition to some customer-defined software. It supports PD2.0, BC1.2 multiple fast charging input protocols, and supports 5W, 7.5W, 10W and 15W wireless charging output. CH246 chip internally integrates FSK/ASK decoding, overvoltage, overcurrent and over-temperature detection and protection. It has high integration and few external components, and can be widely used in various wireless charging base bracket designs.

2. Functional Features

- Support 5V-12V input voltage
- Support 5W, 7.5W,10W and 15W wireless charging output power
- The input supports multiple fast charging protocols such as PD2.0 and BC1.2
- Support half bridge and full bridge output modes
- Internal integrated hardware overvoltage, under-voltage and over-temperature protection
- Internal integrated current detection differential operational amplifier and hardware overcurrent protection
- Internal integrated FSK/ASK demodulation module; external components only need a small amount of resistance and capacitance
- Support static and dynamic FOD detection
- Support NPO, CBB and X7R capacitors; the efficiency can reach 85% when using NPO capacitors
- Independent 2-channel LED status indicator
- Typical static power consumption 25mW

3. Applications

- Wireless charging base
- Wireless charging bracket
- Vehicle wireless charging bracket
- Wireless power bank

4. Package

CH246D (QFN20_3*3) package pins arrangement

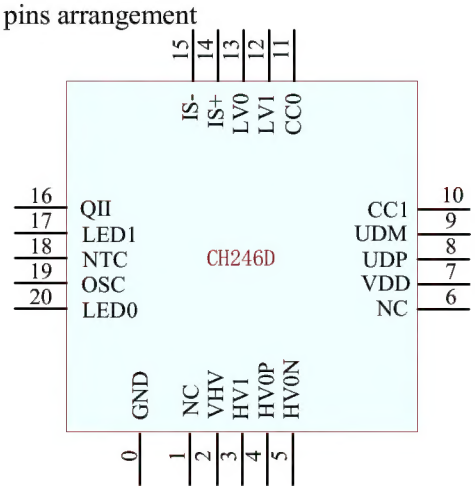

5. Pins

Pin No.	Pin Name	Pin Type	Description
0	GND	Power	Common ground
2	VHV	HV power supply	High-voltage positive power input, an external 1uF decoupling capacitor is required
3	HV1	Unidirectional output	PWM output, output as VHV level
4	HV0P	Unidirectional output	PWM output, output as VHV level, and should be short-circuited externally to HV0N.
5	HV0N	Unidirectional output	PWM output, output as VHV level, and should be short-circuited externally to HV0P
7	VDD	Power	An external 1uF decoupling capacitor is required
8	UDP	Bidirectional Tri-state USB bidirectional	USB bus D+ data line
9	UDM		USB bus D- data line
10	CC1	Bidirectional Tri-state Analog bidirectional	Type-C CC1 input and output
11	CC0		Type-C CC0 input and output
12	LV1	Unidirectional output	PWM output, output as VDD level
13	LV0	Unidirectional output	PWM output, output as VDD level
14	IS+	Analog input	Positive input of current detection differential amplifier
15	IS-	Analog input	Negative input of current detection differential amplifier
16	QII	Analog input	Wireless charging communication data input, and decoded after internal amplification
17	LED1	Open-drain output	Normal operating indicator pin
18	NTC	Analog input	External temperature detection pin
19	OSC	Analog input	Coil voltage detection pin
20	LED0	Analog output	Abnormal working indicator pin
1，6	NC	NC	Reserved

6. Pin Functional Description

6.1. LED0 Pin and LED1 Pin

The LED0 pin is connected to the abnormal working indicator, and the LED1 pin is connected to the normal working indicator. In standby mode, both pins output high level and the LEDs are off. During the charging process, only the LED1 pin outputs low level. After being fully charged, the state of LED1 pin is the same as state in standby mode. If an abnormal FOD is detected, only the LED0 pin will output low level.

6.2. VHV Pin and VDD Pin

The VHV pin supports high voltage input with an input voltage range of 5~12V. The VDD pin is an internal LDO output. It is required to connect 1uF decoupling capacitors close to these two pins respectively.

6.3. H Bridge Drive Pins HV0/1&LV0/1

The HVOP and HVON pins need to be outputted in parallel externally, which is equivalent to the HV0 output. The HV0 and HV1 pins are high-voltage drive pins, which are used to drive the upper tube PMOS of

the H Bridge. The LV0 and LV1 pins are low-voltage drive pins, used to drive lower tube NMOS of H-bridge. Among them, HV0 and LV0 are paired tubes, and HV1 and LV1 are paired tubes.

6.4. UDP/UDM Pin

UD+/UD- pins are used for BC1.2 fast charge protocol handshake.

6.5. CC0/CC1 Pin

The CC0/CC1 pins are used for PD fast charging protocol handshake. If the USB Type-C socket is connected externally, CC0 and CC1 are required to connect 5.1KΩ pull-down resistors to the ground respectively.

6.6. IS+/IS-Pin

Current sampling differential input pin. In order to ensure the accuracy of current sampling, it is required to design according to the differential input when layout.

6.7. NTC Pin

External NTC over-temperature protection pin. If 100K (b=3950) NTC is used, it is recommended to select 24K pull-down resistor. If 10K (b=3950) NTC is used, it is recommended to select 2K pull-down resistor. In the above two cases, the temperature for over-temperature protection is 80°C, the device will stop charging when temperature reaches it, and the device will continue charging when the temperature resumes to 60°C. If the external NTC function is disabled, this pin needs to be connected with low level externally.

6.8. OSC Pin

Coil voltage detection pin, used for static foreign object detection and the maximum coil oscillation voltage limit.

7. Application Reference Circuit

CH246D reference circuit

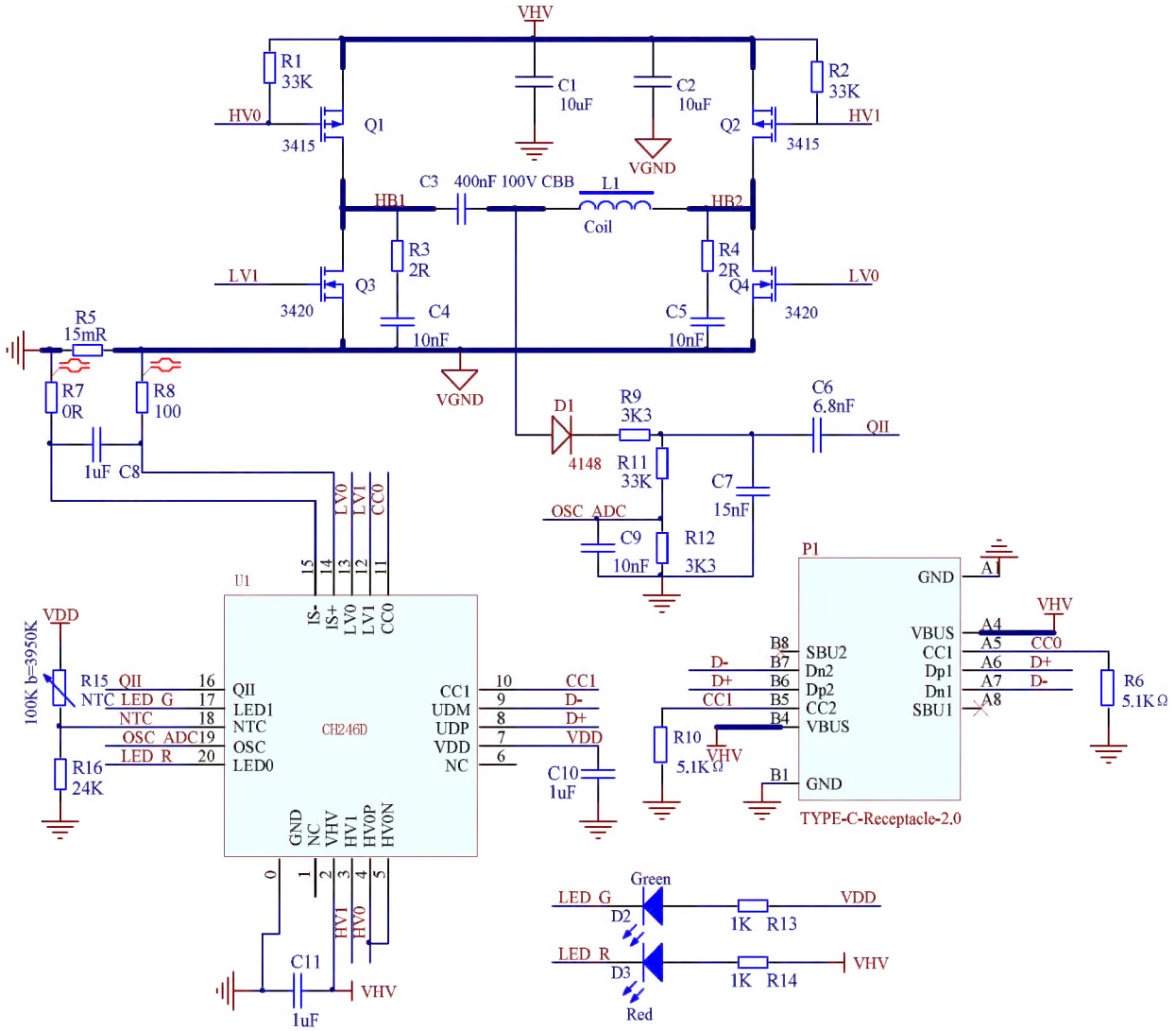

8. PCB Design

The figure below (left) is a reference for the design of current differential sampling input of CH246D chip. R7 is a 0Ω resistor, and R7 is just to better represent the sampling point of the GND network.

The figure below (right) is the reference design of the H-bridge current loop. The current loop shall be as short as possible, and the wiring as wide as possible. C1 and C2 are placed at the input of the current loop.

CH246D (QFN20) PCB reference design

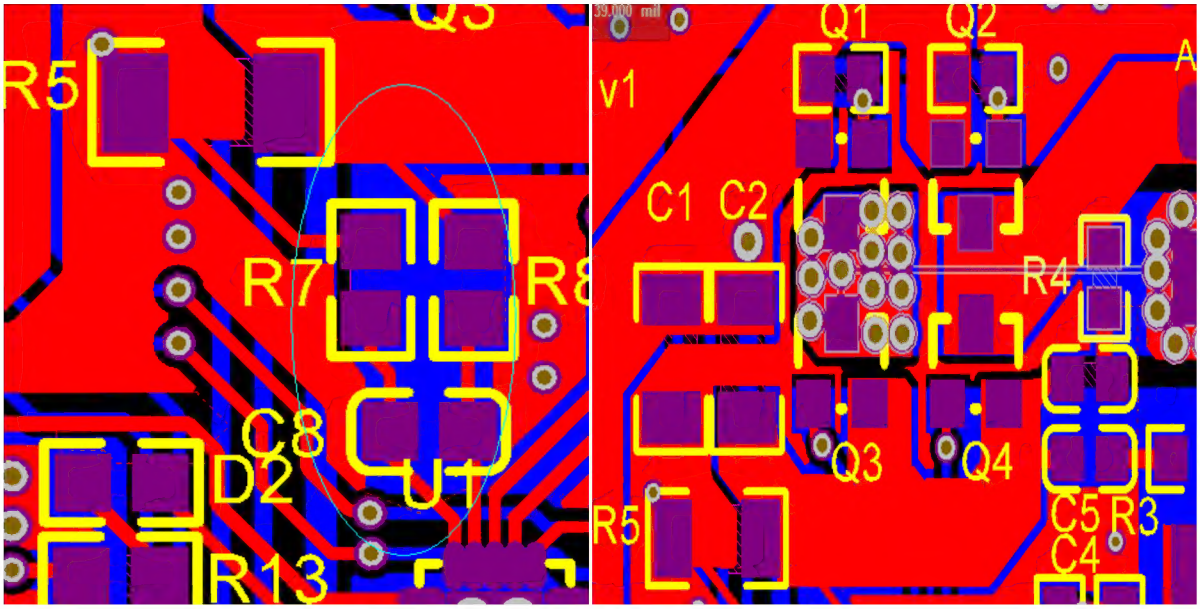

9. Extension

9.1. CH246D + External H-Bridge

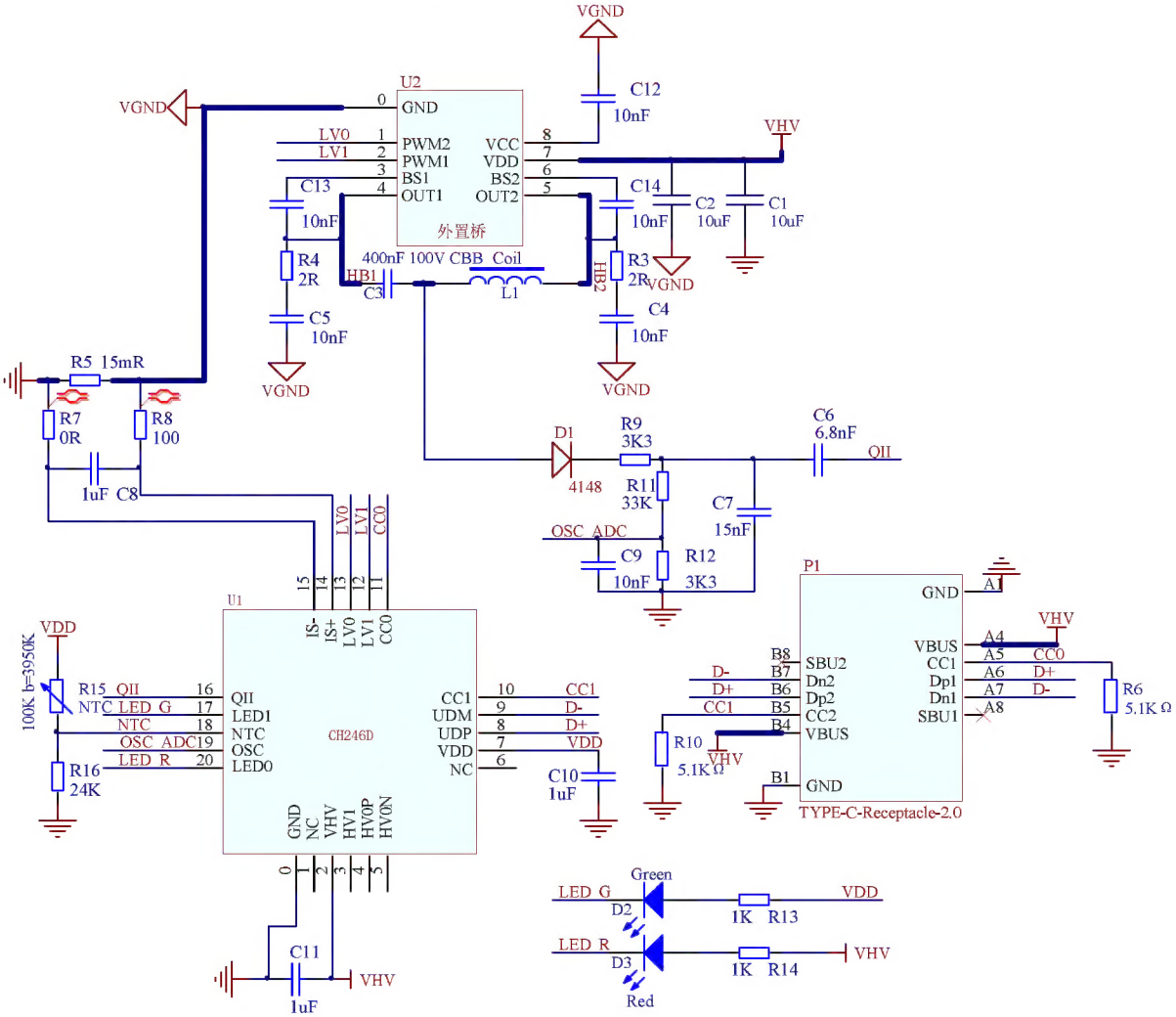

9.2. CH246D + MOS Dual-coil

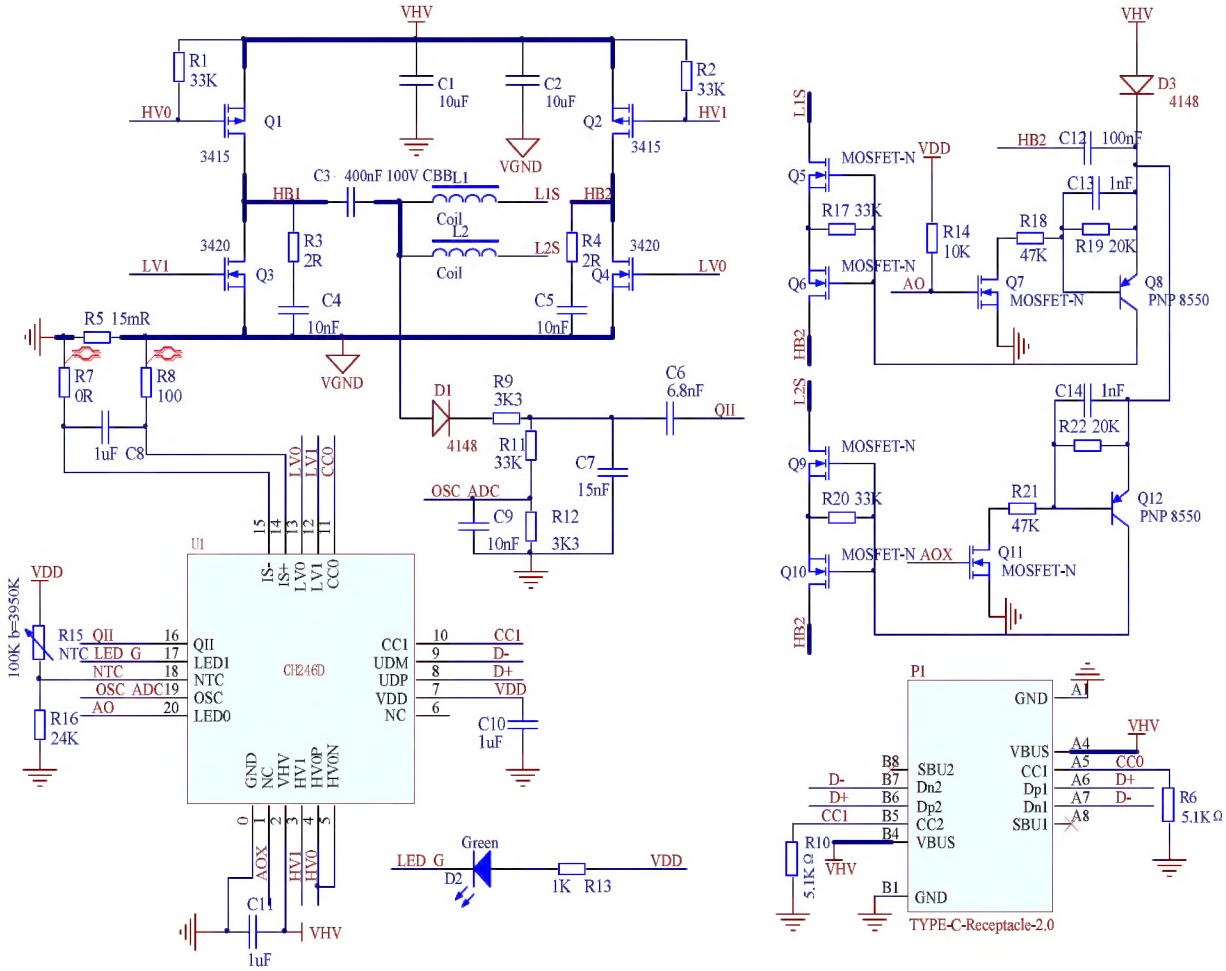

9.3. CH246D + External H-Bridge, Dual-coil

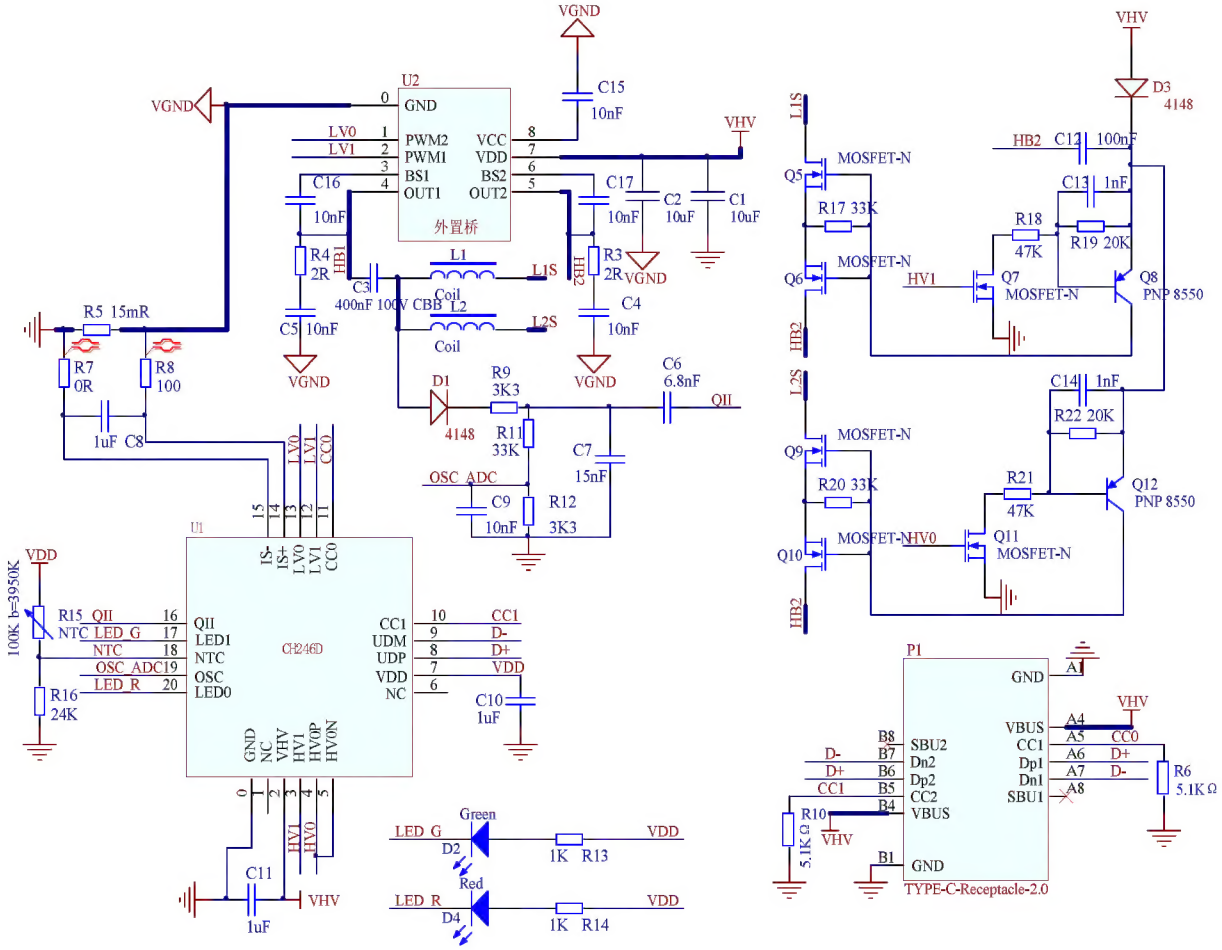

9.4. CH246D + MOS, Fixed frequency adjustable voltage

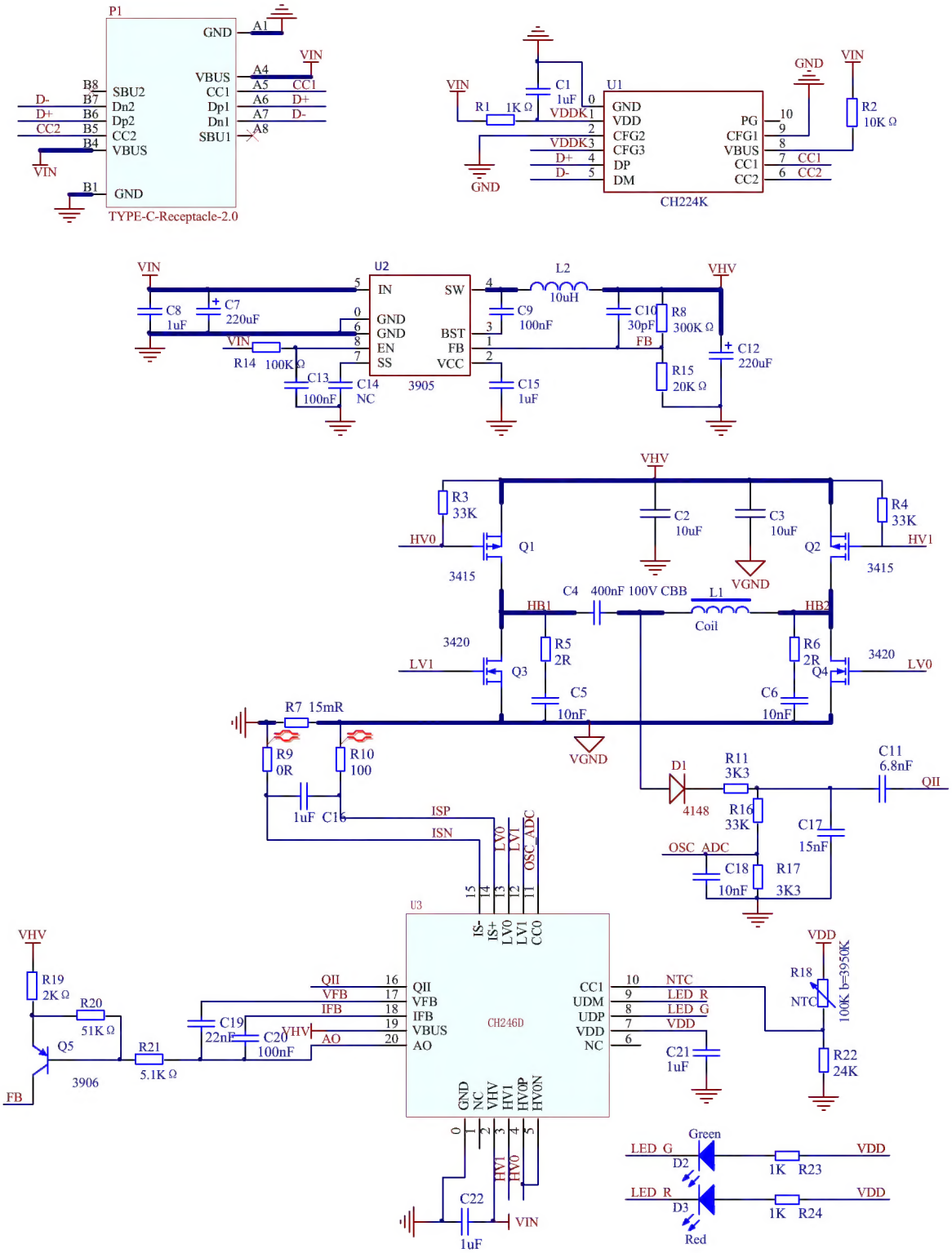

10. Parameters

10.1. Absolute Maximum Value

Critical value or exceeding the absolute maximum value may cause the chip to work abnormally or even be damaged.

Name	Parameter description	Min.	Max.	Unit
TA	Ambient temperature during operation (VHV<16V)	-40	110	℃
TA	Ambient temperature during operation (VHV>=16V)	-40	100	℃
TS	Ambient temperature during storage	-55	125	℃
VDD	Working supply voltage (VDD pin connects to power, GND to ground)	-0.5	6.0	V
VHV	HV supply voltage (VHV pin connects to power, GND to ground)	-0.5	25.0	V
VIO	Voltage on non-high voltage pin	-0.5	VDD+0.5	V
VIOCC	Voltage on CC1 and CC2 pins	-0.5	20.0	V
VIOHV	Voltage on HV0P, HVON, HV1, LED0 and OSC pins	-0.5	25.0	V
PD	Maximum power consumption of the entire chip (VHV voltage * current)		300	mW
ESD	Human body model (HBM)		2	KV

11. Package Information

Package	Width of plastic	Pitch of pin		Ordering information
QFN20	3*3mm	0.40mm	15.7mil	CH246D
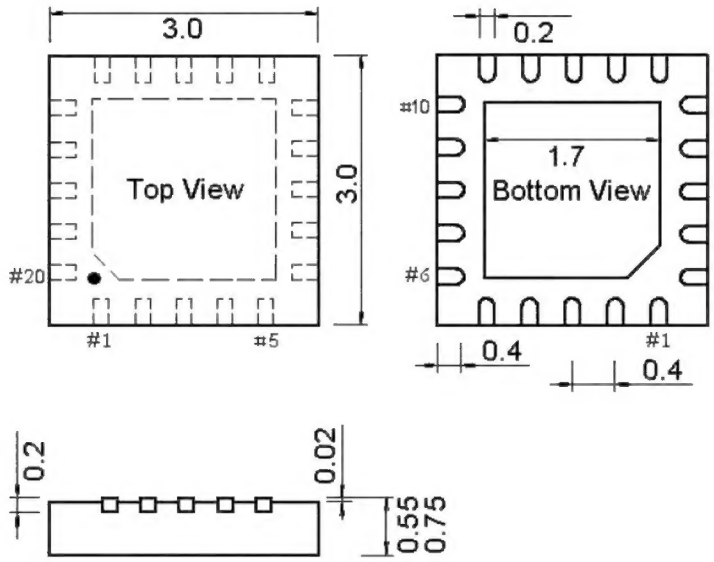
Note: All dimensions are in millimeters.